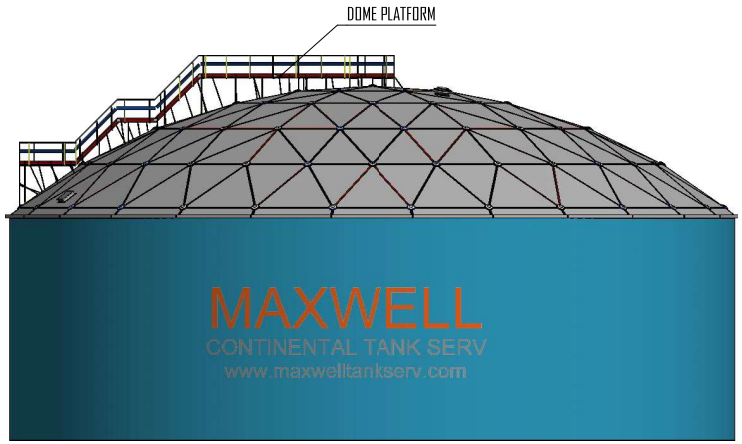

ELEVATION

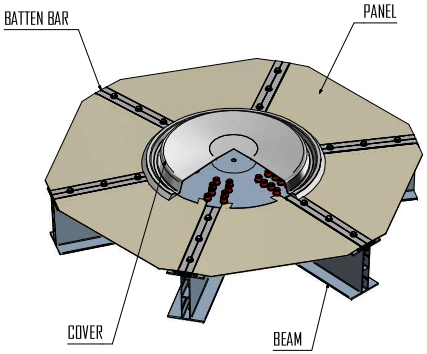

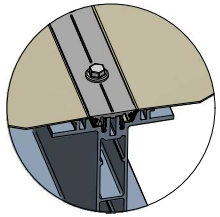

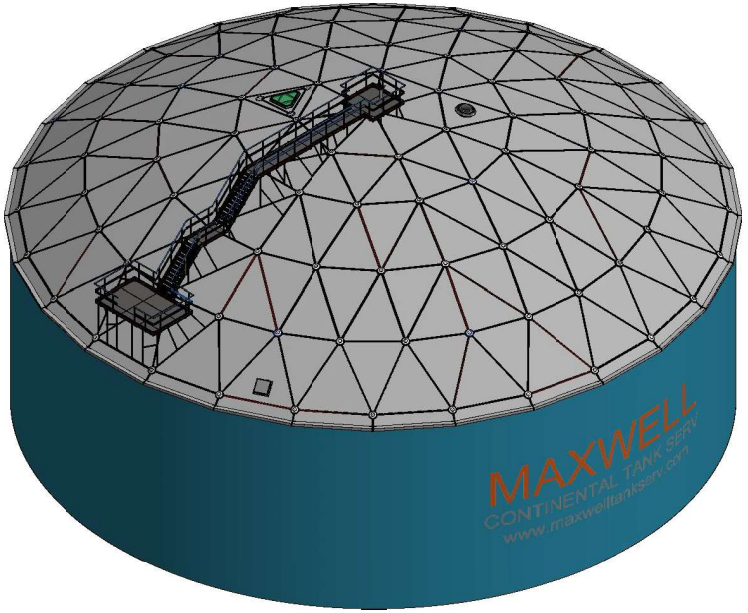

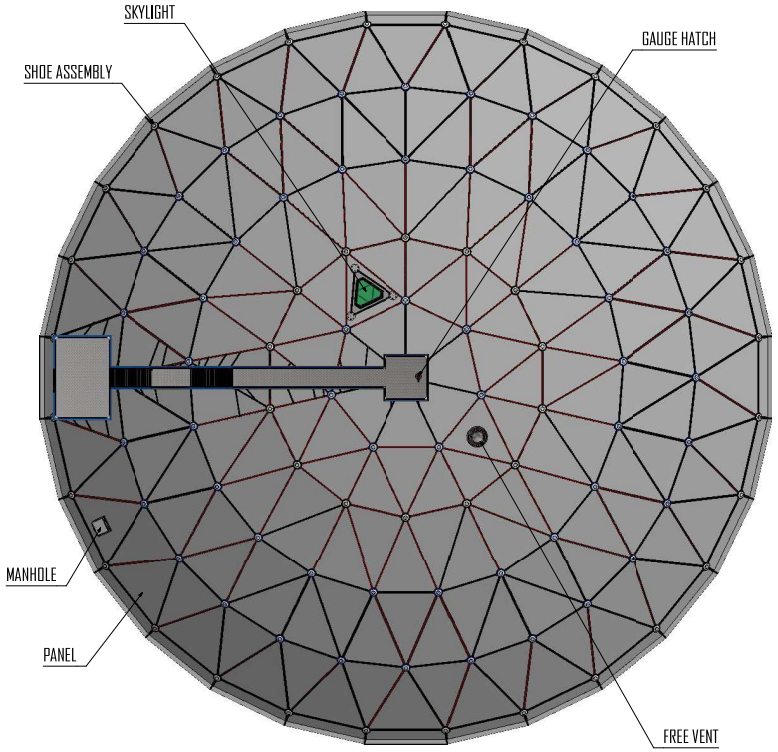

PLAN

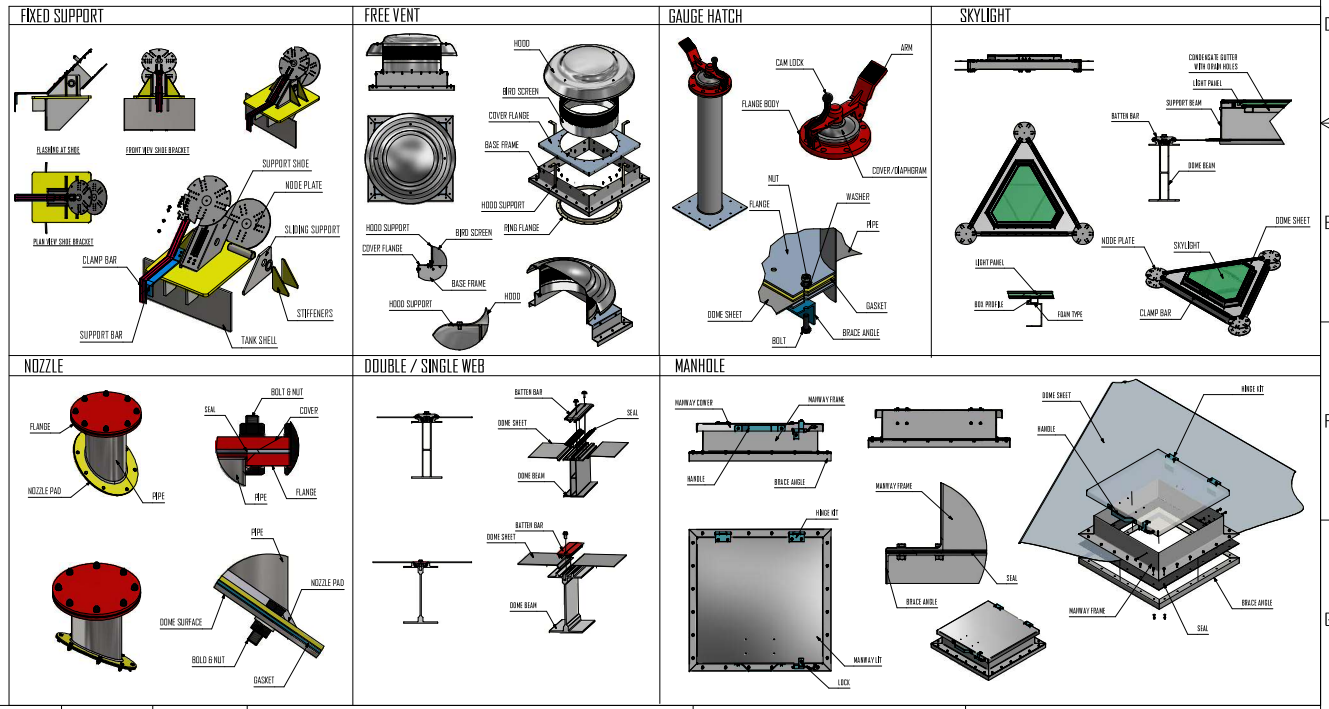

Unless Otherwise Specified All Dimensions Are "millimeters"

Revisions																		
				MWTS Order No		Tank No		Drawn			Drawing Title	Aluminium Geodesic Dome Roof						
				MWTS Reference No		Tank Location		Checked By										
						Tank Diameter		Eng.Approval			Drawing No							
						Plant		Mng.Approval										
						Order No		Q.c. Approval			Size	Rev.	Scale	Sheet	Class	Status	Electronic File#	FOR INFORMATION
						Customer												SALES DRAWING
Rev.	Date	Revision Note	By			Stored Product			Name/Surname	Date/Sign								

Projection: CAD

Third Angle American Protection Sys.
X mm ±0.1 | X.X ±0.13 | X.XX ±0.13 | X.XX mm ±0.5 | X.XX ±0.25 | X.XXX ±0.25
Tolerances Unless Specified
Fractions : ±1/16
Angles : ±0°30'
Gen. Principles:NEN-ISO 129-1
Gen. Tolerances:NEN-EN-ISO 1101
Tol. for linear and angular dimensions:NEN-ISO 2768-1

MAXWELL
CONTINENTAL TANK SERV
www.maxwelltankserv.com
ISO 9001:2015 Certified Company

THIS DRAWING EMBODIES A CONFIDENTIAL PROPRIETARY DESIGN ORIGINATED BY MAXWELL CONTINENTAL TANK SERV, AND ALL DESIGN, MANUFACTURING, REPRODUCTION, USE AND SALE RIGHTS, REGARDING THE SAME ARE EXPRESSLY RESERVED. IT IS SUBMITTED UNDER A CONFIDENTIAL RELATIONSHIP FOR A SPECIFIED PURPOSE, AND THE RECIPIENT AGREES BY ACCEPTING THIS DRAWING NOT TO SUPPLY OR DISCLOSURE ANY INFORMATION REGARDING IT TO ANY UNAUTHORIZED PERSONS OR TO INCORPORATE IN OTHER PROJECTS ANY SPECIAL FEATURES PECULIAR TO THIS DESIGN. ALL PATENTS RIGHTS HERETO ARE EXPRESSLY RESERVED BY MAXWELL CONTINENTAL TANK SERV - NL